FORM NO. MS-4355-16
REPLACES FORM NO. MS-4355-34
FILE IN SECT. 2 OF SERVICE MANUAL

140200 to 140257
141200 to 141257

Illustrated Parts List

MODEL SERIES

140200 to 140257

TYPE NUMBERS
0010 to 0016
0110 to 0149
9020 to 9139
504010 to 504033
505010 to 505033

141200 to 141257

TYPE NUMBERS
0110 to 0139
9120 to 9138
504510 to 504552
505510 to 505532

TO FIND

THE CORRECT NUMBER OF THE PART YOU NEED:

FOLLOW THE INSTRUCTIONS BELOW.

A. Refer to Engine Model, Type and Serial Number that is stamped on the blower housing or name plate of engine. (Engine type numbers such as 505531 are listed complete. Engine type numbers such as 0147 01 are listed herein only as 0147. The two digits (01 or 02, etc.) to the right of the space are not needed for parts identification). Then use the Illustrated Parts List covering these Model Series.

B. Refer to Illustrated Parts section and compare the old part with illustration. The number on the illustration is the Reference Number. Assemblies include all parts shown in frames. All parts shown in assembly frames on which individual reference numbers are given can be purchased separately.

C. After the Reference Number has been identified, refer to the Numerical Parts List, where Reference and Master Part Numbers are listed. THE MASTER PART IS USED ON ALL TYPE NUMBERS EXCEPT THOSE TYPE NUMBERS UNDER "NOTE"

D. If a "Note" appears below the Master Part Number, this means that this part differs from the Master Part for certain types. If the Type Number is listed under "Note", order the part referred to.

E. If the Engine Type Number does not appear after any part number listed under "Note", use the Master Part Number.

F. For Type Numbers higher than those covered by this book, please refer to the factory if you are unable to identify the part by comparison.

PRINTED IN U.S.A.

ORIGINAL BRIGGS & STRATTON SERVICE PARTS ®

140200 to 140257
141200 to 141257

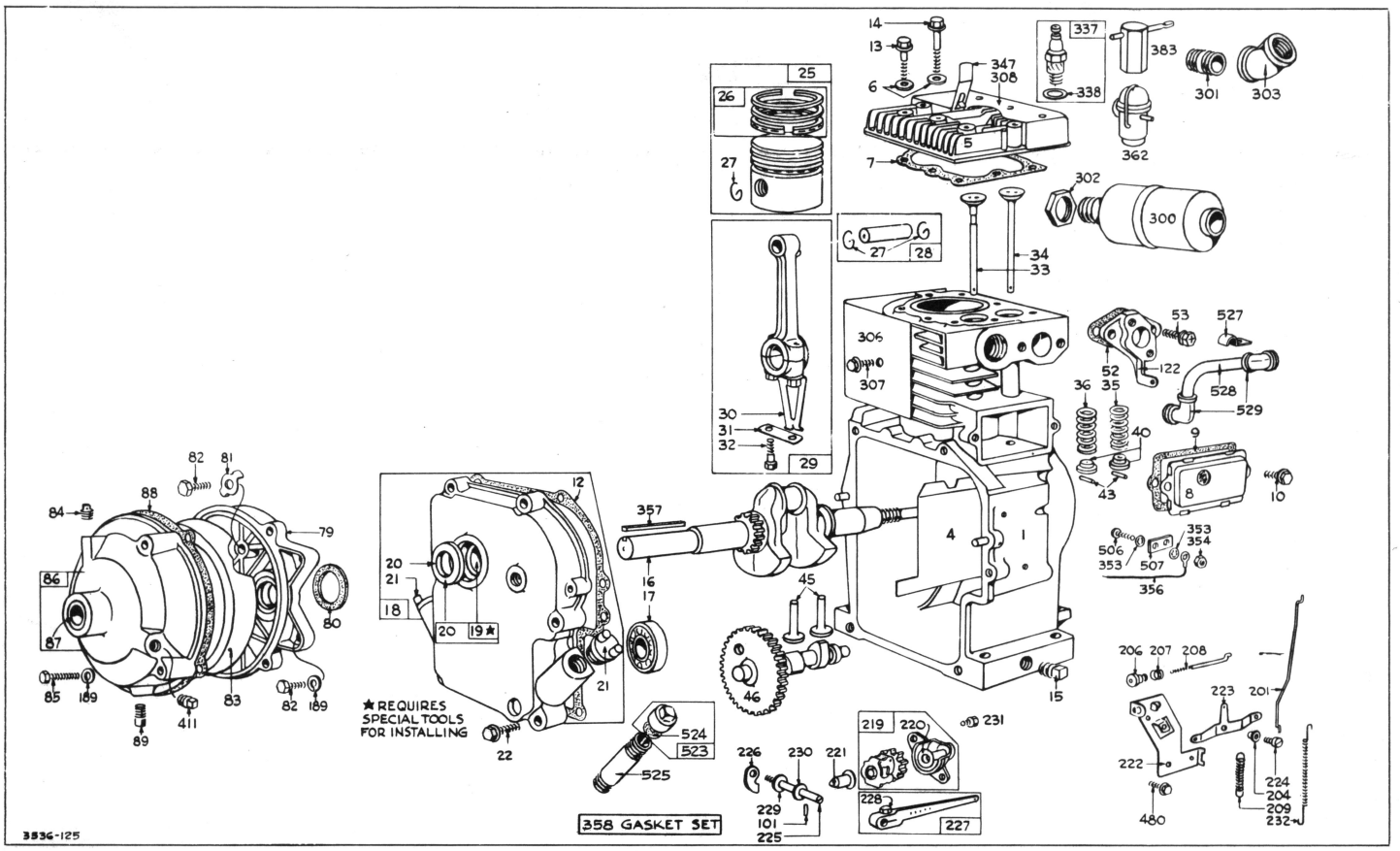

CYLINDER, PISTON, CONNECTING ROD AND CRANKSHAFT PARTS
Assemblies include all parts shown in frames.

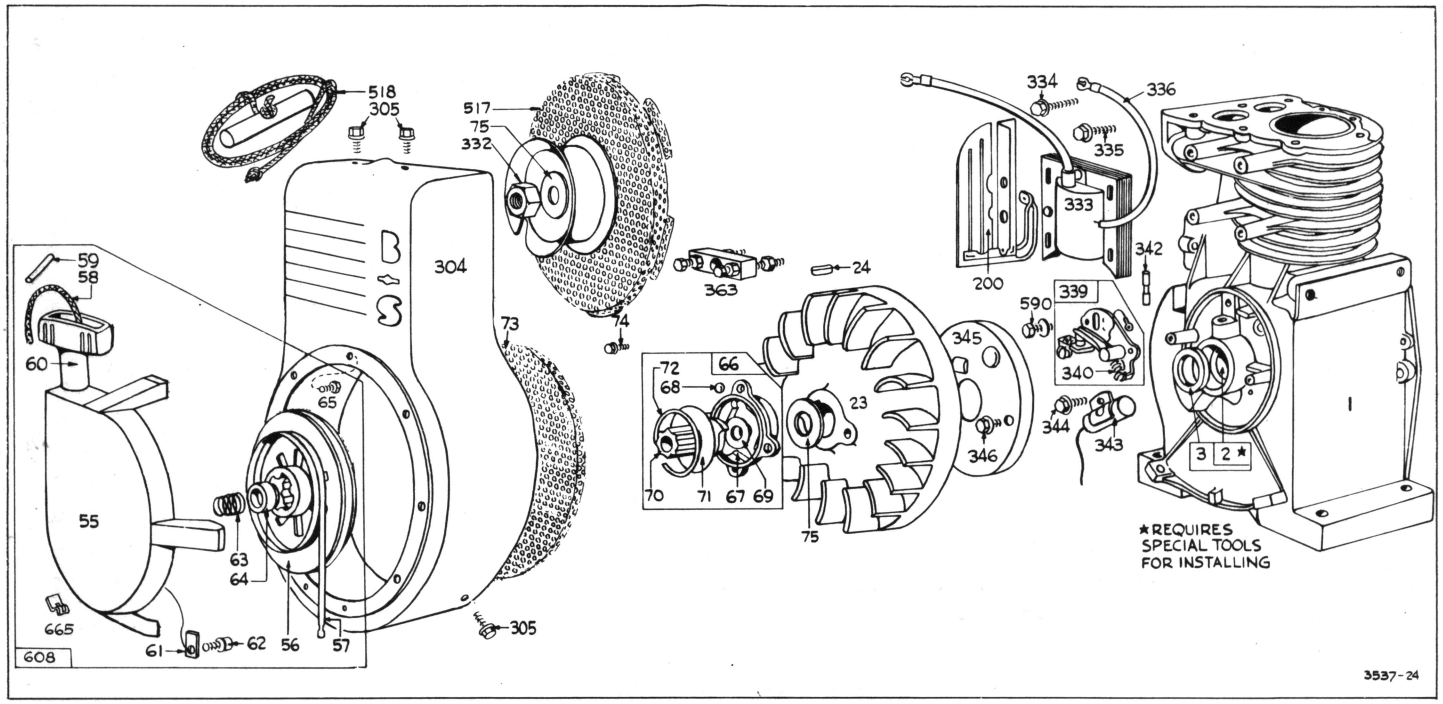

MAGNETO AND BLOWER HOUSING PARTS
Assemblies include all parts shown in frames.

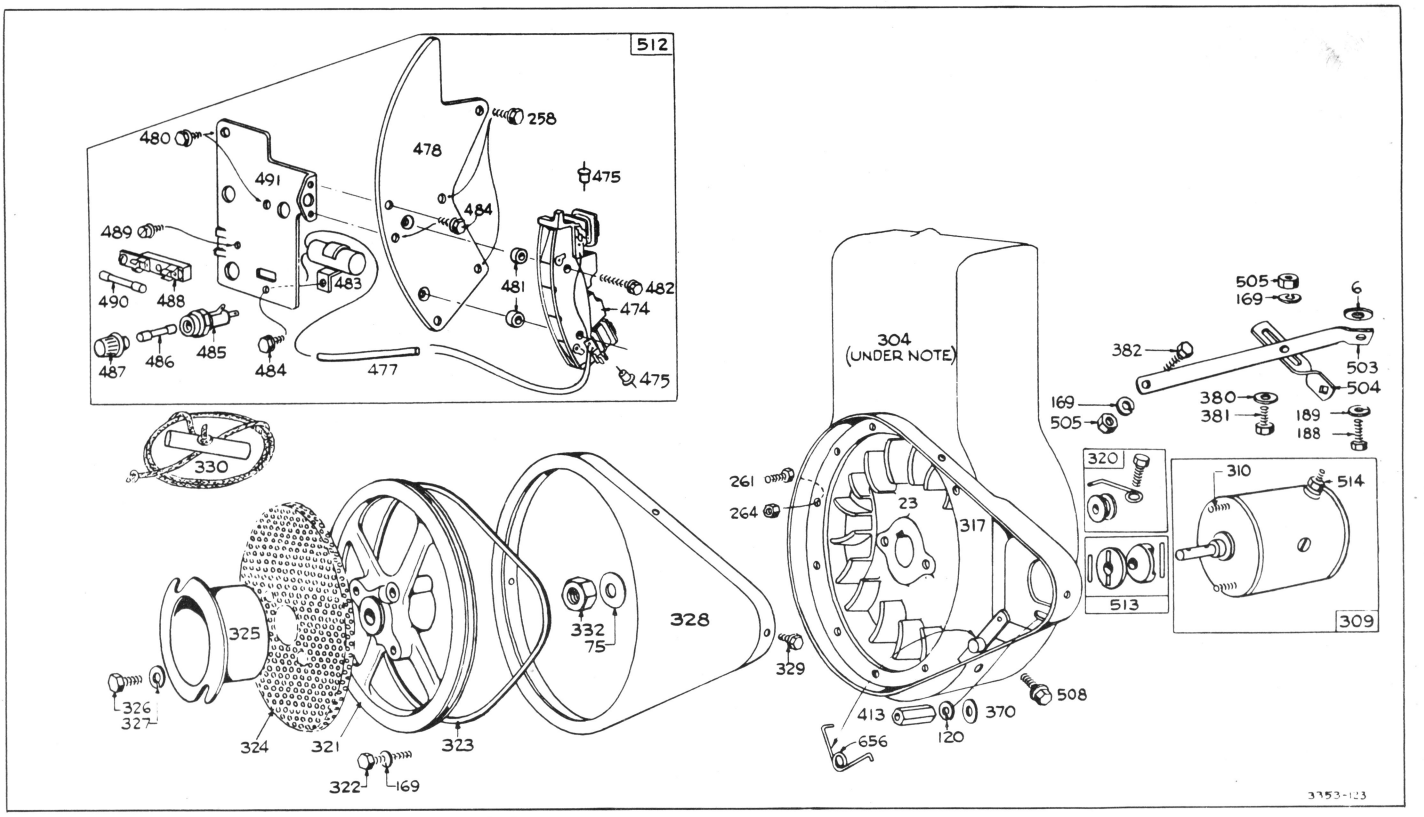

STARTER PARTS
Assemblies include all parts shown in frames.

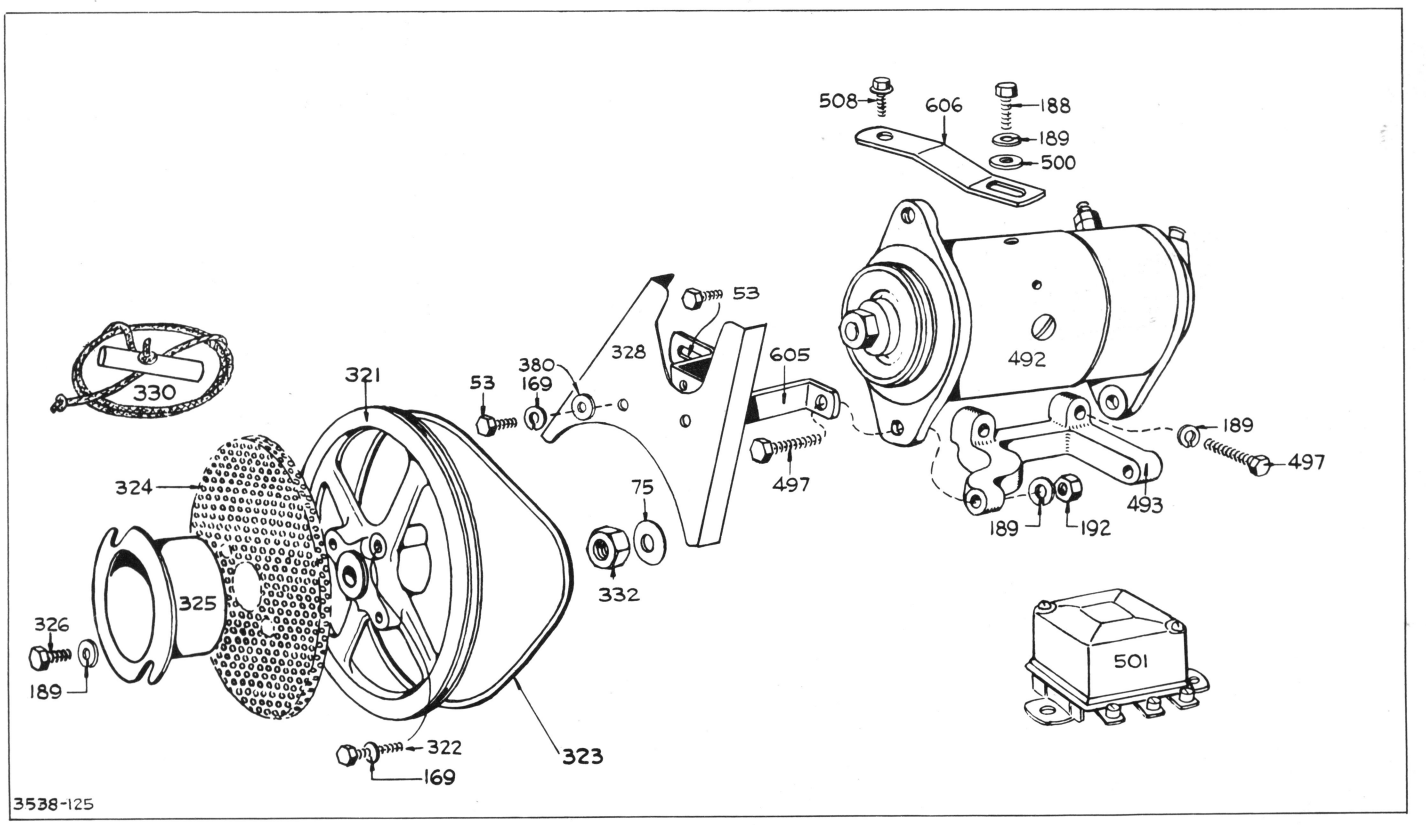

STARTER PARTS
Assemblies include all parts shown in frames.

140200 to 140257
141200 to 141257

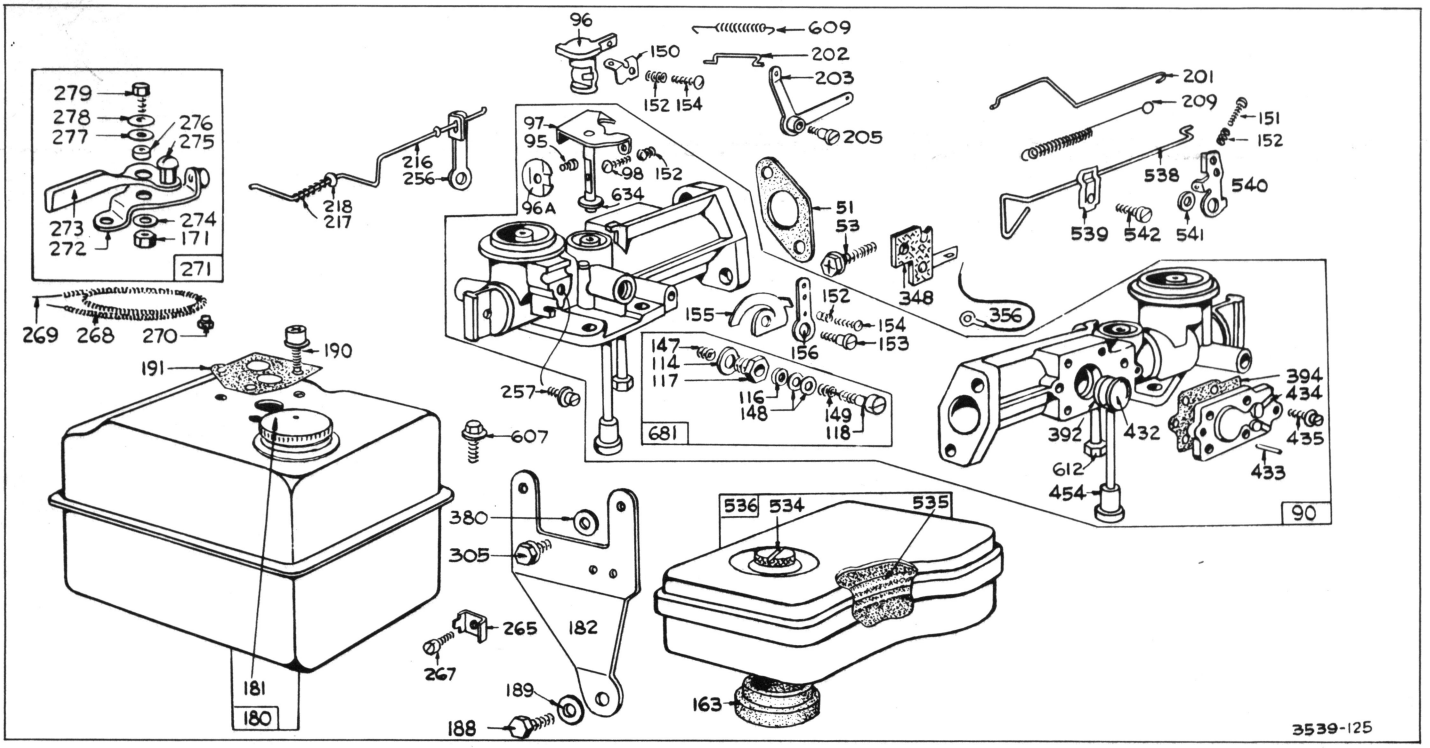

FUEL SYSTEM

Assemblies include all parts shown in frames.

NUMERICAL PARTS LIST

REF. NO.	PART NO.	DESCRIPTION
1	**297723**	Cylinder Assembly "Kool Bore"★ Used on **Model 140200** Series.
	Note:	**297913** Cylinder Assy. Used on **Model 140200** Series type Nos. 0140, 9138, 504031.
	296953	Cylinder Assembly (Sleeve Bore) Used on **Model 141200** Series.
	Note:	**297266** Cylinder Assy. (Sleeve Bore) Used on **Model 141200** Series type Nos. 0137, 504530, 504541, 504543, 504550.
2	**295962**	Bushing—Cylinder
	Note:	Requires special tools for installation.
3	**294606**	Seal—Oil
4	**221001**	Plate—Cylinder Baffle
5	**210578**	Head—Cylinder
6	**22963**	Washer—Plain
7	**†270340**	Gasket—Cylinder Head.
8	**294948**	Breather Assembly
9	**†27803**	Gasket—Valve Cover
10	**93394**	Screw—Breather Mounting Sem
12	**†27750**	Gasket—Crankcase Cover—1/64" thick
	†27876	Gasket—Crankcase Cover—.005" thick
	†27877	Gasket—Crankcase Cover—.009" thick
13	**93210**	Screw—Cylinder Head (2-9/32" long)
14	**93211**	Screw—Cylinder Head (2-21/32" long)
15	**91084**	Plug—Oil Drain
16	**260315**	Crankshaft
	Note:	**260356** Crankshaft Used on **Model 141200** Series type No. 505531. **260358** Crankshaft Used on **Model 140200** Series type Nos. 0115, 0116, 9128, 9129, 504015, 504016, 504017, 504018, 504019, 505015; also used on **Model 141200** Series type Nos. 0115, 0116, 9127, 9128, 504515, 504516, 504517, 504518, 504519, 504527, 505515, 505516, 505517, 505518. **260359** Crankshaft Used on **Model 140200** Series type Nos. 9134, 9138, 505025, 505031; also used on **Model 141200** Series type Nos. 505526, 505528.

†Included in Gasket Set—Part No. 295970

★Trademark of Briggs & Stratton Corp.

REF. NO.	PART NO.	DESCRIPTION
		260389 Crankshaft Used on **Model 140200** Series type Nos. 0120, 0121, 0148, 504020, 504021, 504022, 504023, 504024; also used on **Model 141200** Series type Nos. 0120, 0121, 0131, 504520, 504521, 504522, 504523, 504524, 504530, 504531, 504533, 504542, 504547, 504551, 505520, 505521, 505522, 505523, 505524.
		260407 Crankshaft Used on **Model 141200** Series type No. 504548.
		260423 Crankshaft Used on **Model 140200** Series type Nos. 0131, 0133, 504027, 504029; also used on **Model 141200** Series type Nos. 504526, 504549.
		260425 Crankshaft Used on **Model 140200** Series type Nos. 0138, 0143, 9126, 9127, 9136, 504028, 505010, 505011, 505032; also used on **Model 141200** Series type Nos. 0130, 0135, 0136, 0137, 0138, 9125, 9126, 9138, 504528, 504534, 504543, 504544, 504550, 505510, 505511, 505512, 505513, 505514, 505527, 505532.
		260644 Crankshaft Used on **Model 140200** Series type Nos. 9024, 505030; also used on **Model 141200** Series type No. 505530.
		260663 Crankshaft Used on **Model 141200** Series type Nos. 0129, 504535.
		260833 Crankshaft Used on **Model 140200** Series type No. 9137.
17	**29530**	Bearing–Ball
18	**295868**	Cover Assy. –Crankcase
	Note:	**295876** Cover Assembly–Crankcase Used on **Model 140200** Series type Nos. 0135, 504025.
		295958 Cover Assembly–Crankcase Used on **Model 140200** Series type Nos. 0115, 0116, 0131, 0133, 0138, 0143, 9128, 9129, 9134, 9136, 9138, 504015, 504016, 504517, 504018, 504019, 504027, 504028, 504029, 505015, 505025, 505031, 505032; also used on **Model 141200** Series type Nos. 0115, 0116, 0129, 0130, 0135, 0136, 0137, 0138, 9127, 9128, 504515, 504516, 504517, 504518, 504519, 504526, 504527, 504528, 504534, 504535, 504543, 504544, 504549, 504550, 505515, 505516, 505517, 505518, 505526, 505527, 505528.
		296075 Cover Assembly–Crankcase Used on **Model 140200** Series type Nos. 0120, 0121, 0148, 504020, 504021, 504022, 504023, 504024; also used on **Model 141200** Series type Nos. 0120, 0121, 0131, 504520, 504521, 504522, 504523, 504524, 504530, 504531, 504533, 504542, 504547, 504551, 505520, 505521, 505522, 505523, 505524.
		296184 Cover Assembly–Crankcase Used on **Model 140200** Series type Nos. 9126, 9127, 9137, 505010, 505011; also used on **Model 141200** Series type Nos. 9125, 9126, 9138, 505510, 505511, 505512, 505513, 505514, 505531, 505532.
		296321 Cover Assembly–Crankcase Used on **Model 140200** Series type Nos. 9024, 505030; also used on **Model 141200** Series type No. 505530.
19	**295964**	Bushing–Crankcase Cover
	Note:	Requires special tools for installation.
20	**298423**	Seal–Oil
21	**66768**	Plug–Oil Filler
22	**93205**	Screw–Crankcase Cover Mounting Sem
23	**295214**	Flywheel
	Note:	**296335** Flywheel–Mag. Used on **Model 140200** Series type Nos. 504014, 504019, 504024; also used on **Model 141200** Series type Nos. 0144, 504514, 504519, 504524, 505514, 505519, 505524.
24	**61760**	Key–Flywheel
		MODEL 140200 SERIES PISTON ASSEMBLIES FOR "KOOL BORE"★
25	**297692**	Piston Assembly–Std.
	297693	Piston Assembly–.010" O.S.
	297694	Piston Assembly–.020" O.S.
	297695	Piston Assembly–.030" O.S.
		MODEL 1412 SERIES PISTON ASSEMBLIES (FOR SLEEVE BORE)
	295842	Piston Assembly–Std.
	295846	Piston Assembly–.010" O.S.
	295848	Piston Assembly–.020" O.S.
	295850	Piston Assembly–.030" O.S.

★Trademark of Briggs & Stratton Corp.

140200 to 140257
141200 to 141257

REF. NO.	PART NO.	DESCRIPTION
		MODEL 140200 SERIES PISTON RING SETS FOR "KOOL BORE"★
26	**297815**	Ring Set–Piston–Std. Consists of: **210600** Ring, Piston, Comp., Top, Std. **211037** Ring, Piston, Comp., Center, Standard **210602** Ring, Piston, Oil, Std.
	297705	Ring Set–Piston–.010" O.S. Consists of: **211241** Ring, Piston, Comp., Top, .010" O.S. **211244** Ring, Piston, Comp., Center, .010" O.S. **211247** Ring, Pstn., Oil, .010" O.S.
	297706	Ring Set–Piston–.020" O.S. Consists of: **211242** Ring, Piston, Comp., Top, .020" O.S. **211245** Ring, Piston, Comp., Center, .020" O.S. **211248** Ring, Pstn., Oil, .020" O.S.
	297707	Ring Set–Piston–.030" O.S. Consists of: **211243** Ring, Piston, Comp., Top, .030" O.S. **211246** Ring, Piston, Comp., Center, .030" O.S. **211249** Ring, Pstn., Oil, .030" O.S.
		MODEL 1412 SERIES PISTON RING SETS (FOR SLEEVE BORE)
	295852	Ring Set–Piston–Std. Includes: **210703** Ring, Piston, Comp., Top, Standard **210601** Ring, Piston, Comp., Center, Std. **295843** Ring, Pstn., Oil, Standard (w/expander)
	295853	Ring Set–Piston–.010" O.S. Includes: **210889** Ring, Piston, Comp., Top, .010" O.S. **210890** Ring, Piston, Comp., Center, .010" O.S. **295847** Ring, Pstn., Oil, .010" O.S. (w/expander)
	295854	Ring Set–Piston–.020" O.S. Includes: **210893** Ring, Piston, Comp., Top, .020" O.S. **210894** Ring, Piston, Comp., Center, .020" O.S. **295849** Ring, Pstn., Oil, .020" O.S. (w/expander)
	295855	Ring Set–Piston–.030" O.S. Includes: **210897** Ring, Piston, Comp., Top, .030" O.S. **210898** Ring, Piston, Comp., Center, .030" O.S. **295851** Ring, Pstn., Oil, .030" O.S. (w/expander)
27	**68546**	Lock–Piston Pin
28	**295840**	Pin Assembly–Standard
	295841	Pin Assembly–.005" O.S.
29	**295838**	Rod Assembly–Conn.
30	**220837**	Dipper–Connecting Rod
31	**220811**	Lock–Conn. Rod Screw
32	**92659**	Screw–Connecting Rod
33	**230385**	Valve–Exhaust
	Note:	**260444** Valve–Exhaust Used on **Model 140200** Series type Nos. 0131, 0140, 9138, 504031, 505025; also used on **Model 141200** Series type Nos. 0134, 0137, 0138,

★ Trademark of Briggs & Stratton Corp.

REF. NO.	PART NO.	DESCRIPTION
		504525, 504526, 504530, 504532, 504541, 504543, 504550.
34	230386	Valve–Intake
	Note:	**230385** Valve–Intake Used on **Model 140200** Series type Nos. 0131, 0140, 9138, 504031, 505025; also used on **Model 141200** Series type Nos. 0134, 0137, 0138, 504525, 504526, 504530, 504532, 504541, 504543, 504550.
35	65906	Spring–Intake Valve
36	65906	Spring–Exhaust Valve
	Note:	**26828** Spring–Exhaust Valve Used on **Model 140200** Series type Nos. 0131, 0140, 9138, 504031, 505025; also used on **Model 141200** Series type Nos. 0134, 0137, 0138, 504525, 504526, 504530, 504532, 504541, 504543, 504550.
40	230477	Retainer–Valve Spring
	Note:	**292260** Rotocap–Exhaust Valve Used on **Model 140200** Series type Nos. 0131, 0140, 9138, 504031, 505025; also used on **Model 141200** Series type Nos. 0134, 0137, 0138, 504525, 504526, 504530, 504532, 504541, 504543, 504550.
43	230476	Pin–Valve Spring Ret.
	Note:	**230570** Pin–Exhaust Valve Rotocap Retainer **230569** Retainer–Exhaust Valve Rotocap Used on **Model 140200** Series type Nos. 0131, 0140, 9138, 504031, 505025; also used on **Model 141200** Series type Nos. 0134, 0137, 0138, 504525, 504526, 504530, 504532, 504541, 504543, 504550.
45	260125	Tappet–Valve
46	210728	Gear–Cam
51	†27355	Gasket–Carburetor To Spacer
52	†27828	Gasket–Spacer To Cylinder Mounting
53	93329	Screw–Sem
55	295272	Housing–Rewind Starter
56	295871	Pulley–Rewind Starter
57	294303	Spring–Rewind Starter
58	66564	Rope–Starter (63" Long)
	Note:	If longer rope is needed, order No. 66574 and cut to required length.
59	230228	Pin–Starter Grip
60	66728	Grip–Starter Rope
61	66918	Bumper–Starter Pulley
62	93254	Screw–Pulley Bumper Mounting Sem
63	260414	Spring–Ratchet
64	230543	Adapter–Ratchet Spring
65	93163	Screw–Rewind Starter Housing Mounting Sem
66	295684	Clutch Assembly–Rewind Starter
67	210400	Housing–Rewind Starter Clutch
68	63770	Ball–Clutch
69	66718	Washer–Starter Clutch, Thrust
70	296916	Ratchet–Rewind Starter Clutch
	Note:	**270045** Washer–Ratchet Sealing **260517** Spring–Ratchet Sealing Washer Used on **Model 140200** Series type No. 9137.
71	221301	Washer–Retainer
72	26032	Ring–Clutch Retainer
73	220823	Screen–Rewind Starter
74	93042	Screw–Rotating Screen Mounting Sem
75	220865	Washer–Spring
79	296179	Case Assembly–Gear
80	27884	Gasket–Gear Case to Crankcase Cover
81	220234	Lock–Gear Case Mounting Screw
82	92502	Screw–Cap
83	296052	Shaft Assembly–Drive
	Note:	**296298** Shaft Assembly–Drive Used on **Model 140200** Series type No. 0148; also used on **Model 141200** Series type No. 504531
84	92617	Plug–Breather
85	91386	Screw–Gear Case Cover Mounting
86	296053	Cover Assembly–Gear Case
87	298423	Seal–Oil
88	27328	Gasket–Gear Case Cover
89	91488	Plug–Oil Drain
90	296968	Carburetor Assembly (Manual Choke)
	Note:	**297243** Carburetor Assy. (Mechanical Governor–Manual Choke) Used on **Model 140200** Series type Nos. 9024, 505030; also used on **Model 141200** Series type Nos. 505530, 505531. **297314** Carburetor Assy. (Manual Choke) Used on **Model 140200** Series type Nos. 0135, 0138, 0141, 0142, 0146, 0148, 504028; also used on **Model 141200** Series type Nos. 0132, 0133, 504533, 504534, 504536, 504539, 504547, 504548. **297388** Carburetor Assy. (Mechanical Governor–Manual Choke) Used on **Model 140200** Series type Nos. 9126, 9127, 9128, 9129, 9134, 9136, 9138; also used on **Model 141200** Series type Nos. 9125, 9126, 9127, 9128, 9138, 505511, 505512, 505513, 505514, 505515, 505516,

† Included in Gasket Set–Part No. 295970

140200 to 140257
141200 to 141257

REF. NO.	PART NO.	DESCRIPTION
		505517, 505518, 505519, 505520, 505521, 505522, 505523, 505524, 505526, 505527, 505528.
		297554 Carburetor Assy. (Choke-A-Matic) Used on **Model 140200** Series type Nos. 0125, 0130, 0137, 0139, 504026; also used on **Model 141200** Series type Nos. 0135, 504537, 504538, 504540, 504546.
		298507 Carburetor Assy. (Manual Choke) Used on **Model 140200** Series type No. 0132.
		298621 Carburetor Assy. Used on **Model 140200** Series type No. 0147.
		298666 Carburetor Assy. Used on **Model 140200** Series type No. 9137.
95	**93385**	Screw—Throttle Valve Mounting Sem
96	**210957**	Valve—Throttle
96A	**211203**	Valve—Throttle
97	**297988**	Shaft and Lever—Throttle
98	**93392**	Screw—Machine, Rd. Hd. —#5-40 x ½''
101	**93043**	Pin—Governor Shaft
114	**66594**	Gasket—Needle Valve
	Note:	**66604** Gasket—Needle Valve Used on **Model 140200** Series type Nos. 9024, 505030; also used on **Model 141200** Series type Nos. 505530, 505531.
116	**65978**	Packing—Needle Valve
117	**230590**	Nut—Needle Valve
118	**23433**	Valve—Needle
120	**92290**	Washer—Lock—No. 10 x 1/16'' x 3/64''
122	**210596**	Spacer—Intake Elbow
124	**92636**	Screw—Cap, Hex. Hd. —¼-20 x 2''
147	**230591**	Seat—Needle Valve
148	**22235**	Washer—Needle Valve(2)
149	**26336**	Spring—Needle Valve
150	**220105**	Connector—Gov. Link
151	**93350**	Screw—Machine, Rd. Hd. —5-40 x ¾''
152	**260575**	Spring—Speed and Throttle Adjustment
153	**298031**	Screw—Carburetor Lever
154	**92634**	Screw—Machine, Rd. Hd. —5-40 x 5/8''
	Note:	**93350** Screw—Machine, Rd. Hd. —5-40 x 3/4'' Used on **Model 140200** Series type No. 0147.
155	**220107**	Cam—Speed Adjuster
156	**220949**	Lever—Speed Adjuster
	Note:	**220678** Lever—Speed Adjuster Used on **Model 140200** Series type No. 0147.
163	**†27660**	Gasket—Air Cleaner Mtg.
169	**90832**	Washer—Lock, ¼'' x 3/32'' x 5/64''
171	**92129**	Nut—Hex. —¼-28
180	**296789**	Tank Assembly—Fuel (3 quart)
181	**293270**	Cap—Fuel Tank
	Note:	**297863** Cap—Fuel Tank Used on **Model 140200** Series type No. 9137.
182	**221367**	Bracket—Fuel Tank Sup.
188	**92272**	Screw—Cap, Hex. Hd. —5/16''-18 x ¾''
189	**90366**	Washer—Lock, 5/16'' x 1/8'' x 1/16''
190	**93341**	Screw—Fuel Tank Mtg.
191	**†27911**	Gasket—Fuel Tank Mtg.
192	**91397**	Nut—Hex. —5/16''-18
200	**295844**	Blade—Air Vane Governor
	Note:	**221148** Guide—Air (Mechanical Governor) (Used on type Nos. 9000 to 9139 and all 505500 Series type nos.)
201	**298091**	Link—Air Vane Governor (Used on type Nos. 0110 to 0150 and all 504500 Series type nos.)
	Note:	**260555** Link—Mechanical Governor (Used on type Nos. 9000 to 9139 and all 505500 Series type nos.)
202	**260563**	Link—Throttle (Used on type Nos. 9000 to 9139 and all 505500 Series type nos.)
203	**296791**	Crank—Bell (Used on type Nos. 9000 to 9139 and all 505500 Series type nos.)
	Note:	**297069** Crank—Bell **221425** Arm—Throttle Control **221427** Washer **260546** Spring—Control Arm Return **260575** Spring—Control Arm **221384** Bracket—Return Spring **93149** Screw—Control Arm Used on **Model 140200** Series type Nos. 9024, 505030; also used on **Model 141200** Series type Nos. 505530, 505531. **221390** Crank—Bell Used on **Model 140200** Series type No. 0132. **221764** Crank—Bell Used on Carburetor between Square Control Rod and Link and Speed Control Rod and Governor Lever on **Model 140200** Series type No. 9137.
204	**230117**	Collar
205	**230671**	Screw—Bell Crank Mtg.
	Note:	**92265** Screw—Self Tapping **220982** Washer—Bell Crank Used on **Model 140200** Series type No. 9137. **93342** Screw—Self Tapping

†Included in Gasket Set—Part No. 295970

REF. NO.	PART NO.	DESCRIPTION
		230450 Collar–Bell Crank Used on **Model 140200** Series type No. 0132.
206	**230533**	Nut–Governor Control Rod (Used on type Nos. 0110 to 0150 and all 504500 Series type nos.)
	Note:	**230149** Nut–Governor Control Rod (Used on type Nos. 9000 to 9139 and all 505500 Series type nos.) **230580** Guide–Stop **230253** Stop–Control Rod–7/8" long **93266** Fastener–Washer Used on **Model 140200** Series type No. 9137.
207	**26855**	Spring–Governor Control Rod
208	**230460**	Rod–Air Vane Governor Control (Used on type Nos. 0110 to 0150 and all 504500 Series type nos.)
	Note:	**230559** Rod–Mechanical Governor Control (Used on type Nos. 9000 to 9139 and all 505500 Series type nos.)
209	**260587**	Spring–Air Vane Governor (Used on type Nos. 0110 to 0150 and all 504500 Series type nos.)
	260546	Spring–Mechanical Governor (Used on type Nos. 9000 to 9139 and all 505500 Series type nos.)
216	**260449**	Link–Choke
217	**260189**	Spring–Choke Link
218	**221198**	Washer–Choke Link(3)
219	**296688**	Governor Housing and Gear Assembly
220	**221361**	Washer–Thrust
221	**230177**	Cup–Governor
222	**221144**	Bracket–Mechanical Governor
	Note:	**298640** Bracket–Mech. Governor Used on **Model 140200** Series type No. 9137.
223	**221145**	Lever–Governor Control
	Note:	**93458** Washer–Spring Used between Lever and Bushing on **Model 140200** Series type No. 9137.
224	**91841**	Screw–Machine, Fill. Hd. –6-32 x 1/4"
225	**230526**	Shaft–Governor Lever
226	**220381**	Follower–Governor Crank
227	**296087**	Lever Assembly–Governor
228	**93100**	Screw–Governor Lever
229	**220680**	Washer–Thrust
230	**22826**	Washer–Spacer
231	**93064**	Screw–Governor Housing to Crankcase Cover Mounting Sem
232	**260584**	Spring–Governor Link (Used only on type Nos. 9000 to 9139 and all 505500 Series type nos.)
256	**220952**	Lever–Speed Adjuster
257	**93263**	Screw–Machine, Fill. Hd. –#10-32 x 3/8"
258	**93062**	Screw–Sem
261	**93105**	Screw–Sem
264	**90355**	Nut–Hex. –10-32
265	**221370**	Clamp–Casing
267	**92715**	Screw–Sem
268	**65616**	Casing–Control Wire–72" long
	Note:	If longer casing is required, specify length in inches; if shorter wire is needed, order No. 65616 and cut to required length.
269	**26633**	Wire–Control–78" long
	Note:	If longer wire is required, specify length in inches; if shorter wire is needed, order No. 26633 and cut to required length.
270	**63426**	Locknut–Control Wire Casing
271	**290568**	Lever Assembly–Control
272	**290584**	Base–Control Wire
273	**290642**	Lever–Control
274	**91237**	Washer–Lock–1/4" x 3/32" x 5/64"
275	**92287**	Screw–Machine, Rd. Hd. –10-32 x 1/4"
276	**22834**	Washer–Spacer
277	**22368**	Washer–Control Lever
278	**22725**	Washer–Control Lever
279	**92306**	Screw–Cap, Hex. Hd.–1/4-28 x 5/8"
300	**294599**	Muffler–Exhaust
301	**91245**	Nipple–Exhaust
302	**91242**	Locknut–Muffler and Elbow
303	**91246**	Elbow–Muffler–45 degree
	Note:	**91219** Elbow–Muffler–45 degree, Street Used on **Model 141200** Series type Nos. 0133, 504536, 504540. **91464** Elbow–Muffler–90 degree, Street Used on **Model 140200** Series type Nos. 0125, 0130, 0137, 0138, 0139, 0147, 9137, 504028; also used on **Model 141200** Series type Nos. 504026, 504537, 504538.
304	**295389**	Housing–Blower
	Note:	**294605** Housing–Blower Used on **Model 140200** Series type No. 9137; also used on **Model 141200** Series type No. 9138. **296454** Housing–Blower When ordering this blower housing, order No. 297415 screw and nut kit to remount the belt guard. Used on **Model 140200** Series type Nos. 504014, 504019, 504024; also

140200 to 140257
141200 to 141257

REF. NO.	PART NO.	DESCRIPTION
		used on **Model 141200** Series type Nos. 0114, 504514, 504519, 504524, 505514, 505519, 505524.
	296470	Housing—Blower When ordering this blower housing, order No. 297415 screw and nut kit to remount the belt guard. Used on **Model 140200** Series type Nos. 504013, 504018, 504023; also used on **Model 141200** Series type Nos. 504513, 504518, 504523, 505513, 505518, 505523.
	297189	Housing—Blower Used on **Model 140200** Series type Nos. 504012, 504017, 504022; also used on **Model 141200** Series type Nos. 0112, 504512, 504517, 504522, 505512, 505517, 505522.
305	**93158**	Screw—Blower Housing, Guard and Tank Bracket to Support Bracket Mounting Sem
	Note:	**93294** Screw—Blower Housing Mounting Sem (At Bottom)
		62199 Washer—Plain Used on **Model 141200** Series type No. 505523.
306	**221005**	Shield—Cylinder
307	**93163**	Screw—Cylinder Shield Mounting Sem
308	**220824**	Cover—Cylinder Head
309	**296122**	Motor—Electric Starter (12 volt) (Electric Auto-Lite No. Med. 4001) For Service on these motors see your nearest "Authorized Auto-Lite Service Station."
310	**93268**	Bolt—Case
317	**296013**	Bracket—Starter
320	**297162**	Pulley—Idler
321	**210961**	Pulley—Electric Starter
321A	**210899**	Pulley—Vee Belt
322	**90931**	Screw—Cap, Hex. Hd.—¼-20 x 2¼"
323	**67318**	Belt—Vee
323A	**66828**	Belt—Vee
324	**221067**	Screen—Electric Starter
325	**22809**	Pulley—Rope Starter
326	**90681**	Screw—Cap, Hex. Hd.—5/16-18 x 5/8"
327	**91388**	Washer—Lock, 5/16 x 3/32 x 5/64"
328	**221122**	Guard—Belt
328A	**221447**	Guard—Belt
329	**93246**	Screw—Belt Guard Mounting Sem
330	**29878**	Rope—Starter
332	**92284**	Nut
333	**296834**	Armature Assembly
334	**93381**	Screw—Armature Mounting Sem
335	**93381**	Screw—Armature Mounting Sem (with 2 washers)
336	**296827**	Cable—Ignition (Used before Serial No. 38769. Cables used after this serial number are integral with the ignition coil.)
337	**29693**	Plug—Spark
	Note:	**293918** Plug—Spark Used on **Model 140200** Series type Nos. 9134, 9136, 9138, 505025, 505031, 505032; also used on **Model 141200** Series type Nos. 9138, 505527, 505528, 505532.
338	**29806**	Gasket—Spark Plug
339	**29667**	Breaker Assembly—Ignition
340	**26018**	Spring—Breaker Arm
342	**65704**	Plunger—Breaker Point
343	**29861**	Condenser
344	**93370**	Screw—Condenser Mounting Sem
345	**221046**	Cover—Breaker Point
346	**93014**	Screw—Breaker Point Cover Mounting Sem
347	**221808**	Switch—Stop
	Note:	**297472** Switch—Stop Used on Mech. Governor Bracket on **Model 140200** Series type No. 9137.
348	**296110**	Plate Assembly—Stop Switch Insulator
353	**92791**	Washer—Lock—Shakeproof
354	**90576**	Nut—Hex.—8-32
356	**295413**	Wire—Ground
357	**91540**	Key—Pulley
358	**295970**	Gasket Set
362	**291630**	Shield—Spark Plug (with stop switch)
	Note:	**66538** Elbow—Spark Plug Used on **Model 140200** Series type No. 9137; also used on **Model 141200** Series type No. 505531.
363	**19165**	Puller—Flywheel (optional accessory)
370	**66432**	Washer—Plain
380	**62199**	Washer—Plain
381	**91419**	Screw—Cap, Hex. Hd.—¼-20 x 5/8"
382	**92666**	Screw—Cap, Hex. Hd.—¼-20 x ½"
383	**89838**	Wrench—Spark Plug
392	**260455**	Spring—Fuel Pump Diaphragm
394	**270026**	Diaphragm
411	**93448**	Plug—Oil Level Hole
413	**230581**	Nut—Starter Mounting
432	**221377**	Cap—Spring
433	**93265**	Pin—Diaphragm Cover
434	**210959**	Cover—Diaphragm
435	**93141**	Screw—Diaphragm Cover
454	**296178**	Housing—Fuel Pipe Screen (For 3/16" O.D. Brass Pipe)
	296191	Housing—Fuel Pipe Screen (For 1/8" O.D. Brass Pipe)
474	**296436**	Armature—Flywheel Generator
475	**296562**	Rectifier

REF. NO.	PART NO.	DESCRIPTION
477	67538	Sleeving–Wire
478	296367	Plate–Generator Mtg.
480	93163	Screw–Support Plate and Bracket Mounting Sem
481	230582	Spacer–Armature Mtg.
482	93234	Screw–Armature Mounting Sem
483	296266	Capacitor (Condenser)
484	93166	Screw–Self Tapping, Hex. Hd., Sem
485	296437	Post Assembly–Fuse
486	67135	Fuse–3AG–1½ Amperes
487	296347	Cap–Fuse Holder
488	296579	Block Assembly–Fuse
489	93237	Screw–Fuse Block Mounting Sem
490	67125	Fuse–3AG–7½ Amperes
491	221241	Support–Charger Mtg.
492	296028	Starter–Generator (12 volt) (Delco-Remy No. 1101968 and Pulley–Delco-Remy No. 1949358)
	Note:	For service on the Starter-Generator, see your nearest "Authorized Delco-Remy Service Station of United Motors."
493	211112	Bracket–Lower Starter
497	91203	Screw–Cap, Hex. Hd.–5/16-18 x 1"
500	91325	Washer–Plain
501	295924	Regulator–Voltage (Delco-Remy No. 1118988).
503	221205	Strap–Starter (long)
504	221206	Strap–Starter (short)
505	92278	Nut–Hex. –¼-20
506	90072	Screw–Machine, Rd. Hd. –8-32 x 5/8"
507	66895	Insulator
508	93294	Screw–Blower Housing Mounting Sem
512	296560	Armature and Wiring Assembly
513	296567	Clutch Assembly–Electric Starter
514	91700	Nut–Hex. –¼-20
517	295423	Pulley–Rope Starter
518	69932	Rope–Starter
523	295940	Cap Assembly–Oil Filler
524	65304	Gasket–Oil Filler Cap
525	230553	Pipe–Oil Filler
527	221428	Clamp–Breather Tube
528	230670	Tube–Breather
529	66928	Grommet–Breather Tube
534	93322	Screw–Air Cleaner
535	27987	Element–Air Cleaner
	Note:	**294861** Cover and Filter–Air Cleaner Used on **Model 140200** Series type No. 0143. Uses: **27795** Gasket (Internal)
536	297036	Cleaner Assembly–Air
	Note:	**294870** Cleaner Assy.-Air (Includes Mounting Stud) Used on **Model 140200** Series type No. 0143. **297778** Cover–Carburetor (Includes Mounting Stud) Used on **Model 140200** Series type No. 9137.
538	260560	Rod–Speed Control
	Note:	**260683** Rod–Speed Control **260684** Link–Speed Control Used between rod and speed adjuster lever on **Model 140200** Series type Nos. 0135, 0148, 504025. **260683** Rod–Speed Control **260684** Link–Speed Control Used between Square Rod and Bell Crank on Carburetor.
		260845 Link–Speed Control Used between Bell Crank and Governor Lever on **Model 140200** Series type No. 9137.
539	221372	Clip–Speed Control
	Note:	**66432** Washer **26157** Spring Used on **Model 140200** Series type Nos. 0135, 0148, 504025. **221766** Cap–Friction Spring **260847** Spring–Friction Used on **Model 140200** Series type No. 9137.
540	221380	Lever–Speed Adjuster
541	22398	Washer–Speed Adjuster Lever to Carburetor
542	91494	Screw–Clip Mounting
	Note:	**91359** Screw–Machine, Fill. Hd. –#10-32 x ¾" Used on **Model 140200** Series type Nos. 0135, 0148, 504025. **92484** Screw–Machine, Fil. Hd. –10-32 x 1/2" Used on **Model 140200** Series type No. 9137.
590	93226	Screw–Breaker Mounting
605	297170	Bracket–Guard
606	221445	Strap–Adjusting
607	93338	Screw–Sem (Bracket to Cylinder)
608	295001	Starter Assembly–Rewind
609	260564	Spring–Throttle Link
612	296811	Pipe–Fuel (Plastic)
634	270167	Washer–Throttle Shaft (felt)
655	221014	Anchor–Spring
656	260672	Spring–Idler Arm
681	299060	Needle Valve Kit

ORIGINAL

BRIGGS & STRATTON

SERVICE PARTS ®